Abrasion Resistance

These samples were tested identically on a Taber Abraser, 1,000 gram total load, 7,000 cycles, CS-17 wheel.

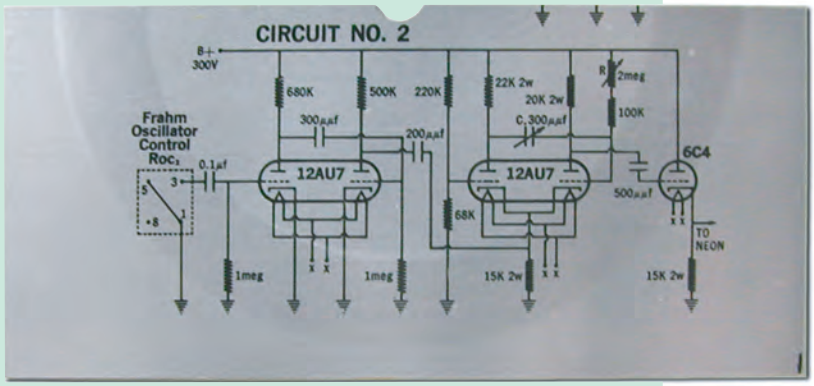

Metalphoto

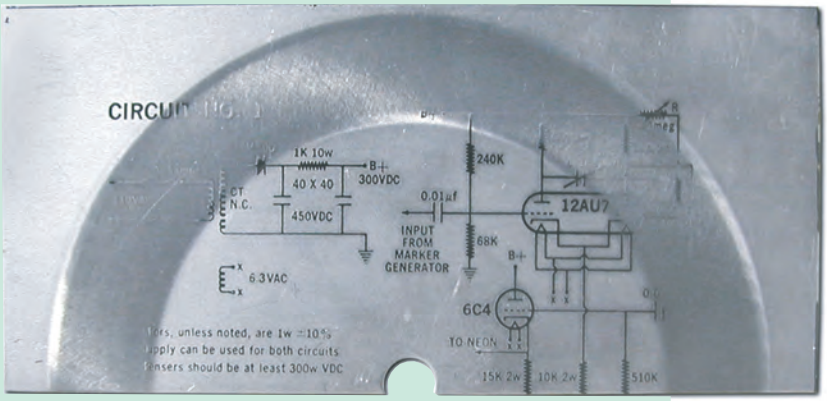

Etched

metalphoto®

A Division of Horizons Incorporated - 18531 South Miles Road - Cleveland, Ohio 44128 - 800-482-7758